AFC INDUSTRIES, INC.
13-16 133 PLACE
COLLEGE POINT, NY 11356
TEL: (718)747-0237
FAX: (718)747-0726

THE PLANS AND DRAWINGS CONTAINED HEREIN ARE PROPRIETARY AND MAY NOT BE COPIED OR REPRODUCED MECHANICALY, ELECTRONICALY OR BY ANY MEANS WITHOUT WRITTEN PERMISSION FROM AFC INDUSTRIES, INC.

TOP VIEW

SIDE VIEW

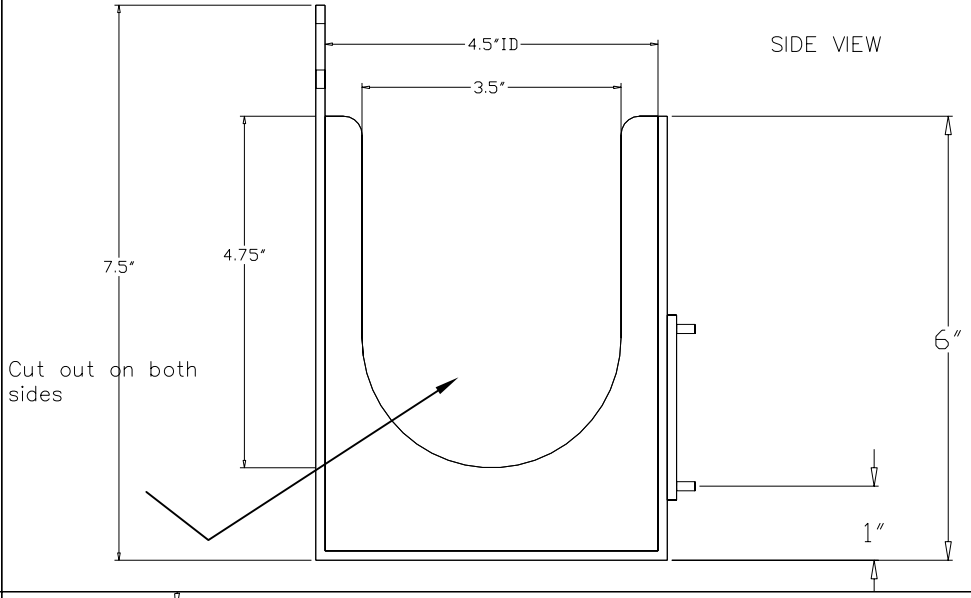

FRONT VIEW

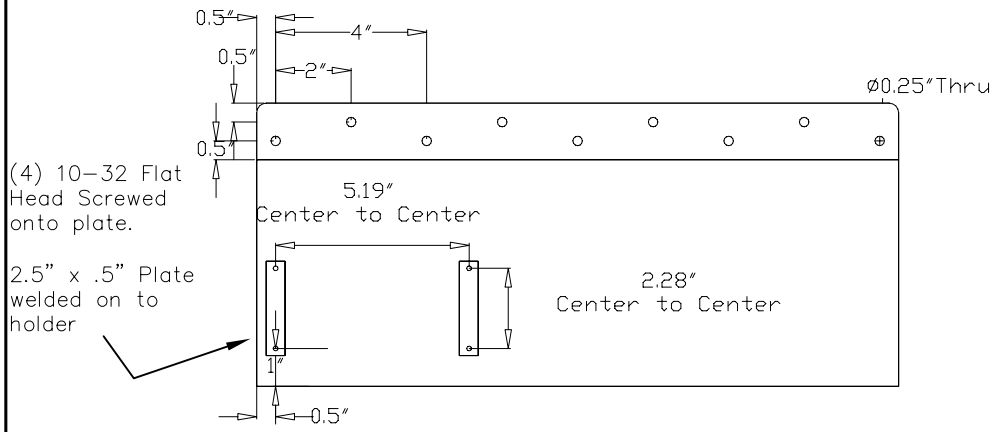

ISO VIEW

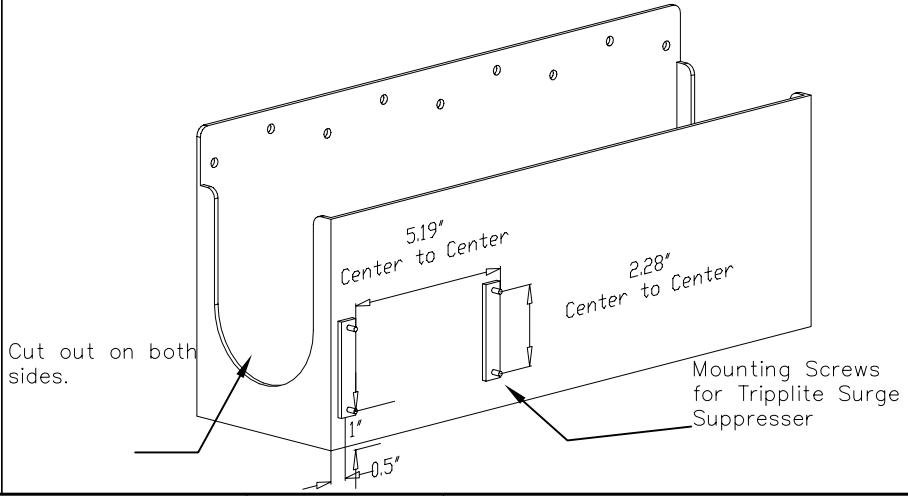

NOTES : ALL UNITS IN INCHES.

All corners broken(R 0.25")

MATERIAL : 16 G CRS

TOLERANCES UNLESS OTHERWISE SPECIFIED

FRACTIONAL	±1/64
2 PLC. DEC.	±.01
3PLC. DEC.	±.001
ANGULAR	±.5°
FINISH	32/

DRAWN BY : VGM	DATE: 05/26/04
A P P R O V E D	
ENG :	
MFG :	
QA :	
SCALE : N.T.S.	

DESCRIPTION : Custom CPU holder

USED ON :

PATH : Customers\Customers\NY Hosp

PDF NAME: WMCS 1860_03 | FOLDER : | REV: | SIZE A